Performance Rated I-Joists

ENGINEERED WOOD SYSTEMS
APA EWS

WOOD
The Miracle Material™

Wood is the right choice for a host of construction applications. It is the earth's natural, energy efficient and renewable building material.

Engineered wood is a better use of wood. The miracle in today's wood products is that they make more efficient use of the wood fiber resource to make stronger plywood, oriented strand board, I-joists, glued laminated timbers, and laminated veneer lumber. That's good for the environment, and good for designers seeking strong, efficient, and striking building design.

A few facts about wood.

- ***We're not running out of trees.*** One-third of the United States land base – 731 million acres – is covered by forests. About two-thirds of that 731 million acres is suitable for repeated planting and harvesting of timber. But only about half of the land suitable for growing timber is open to logging. Most of that harvestable acreage also is open to other uses, such as camping, hiking, and hunting. Forests fully cover one-half of Canada's land mass. Of this forestland, nearly half is considered productive, or capable of producing timber on a sustained yield basis. Canada has the highest per capita accumulation of protected natural areas in the world – areas including national and provincial parks.

- ***We're growing more wood every day.*** American landowners plant more than two billion trees every year. In addition, millions of trees seed naturally. The forest products industry, which comprises about 15 percent of forestland ownership, is responsible for 41 percent of replanted forest acreage. That works out to more than one billion trees a year, or about three million trees planted every day. This high rate of replanting accounts for the fact that each year, 27 percent more timber is grown than is harvested. Canada's replanting record shows a fourfold increase in the number of trees planted between 1975 and 1990.

- ***Manufacturing wood is energy efficient.*** Wood products made up 47 percent of all industrial raw materials manufactured in the United States, yet consumed only 4 percent of the energy needed to manufacture all industrial raw materials, according to a 1987 study.

Material	Percent of Production	Percent of Energy Use
Wood	47	4
Steel	23	48
Aluminum	2	8

- ***Good news for a healthy planet.*** For every ton of wood grown, a young forest produces 1.07 tons of oxygen and absorbs 1.47 tons of carbon dioxide.

Wood, the miracle material for the environment, for design, and for strong, lasting construction.

NOTICE:
The technical data contained in this guide applies to I-joists that bear the APA Performance Rated I-Joist (PRI™) trademark. These trademarked products, manufactured by APA EWS member mills, adhere to our quality assurance program and conform to PRI-400, "Performance Standard for APA EWS I-Joists."

APA PERFORMANCE RATED™ I-JOISTS PROVIDE QUALITY CHOICE FOR RESIDENTIAL FLOORS

APA – The Engineered Wood Association has made it easy to make the right choice for residential floor joist products.

APA Performance Rated™ I-Joists (PRI™) provide a high performance alternative to dimension lumber joists for residential floor applications. This guide will help you efficiently use APA PRIs by walking you through the simple steps of product selection, specification, and installation.

The APA trademark signifies that the I-joist manufacturer is committed to the strict quality standards of Engineered Wood Systems (EWS), a related corporation of APA, and that the PRIs are manufactured in conformance with PRI-400, *Performance Standard for APA EWS I-Joists*. APA's rigorous program of quality verification and testing is designed to assure predictable product performance.

PRI-400 brings product standardization while providing for a multitude of design and construction situations. The standard provides design information for numerous types and sizes of I-joists. Now specifiers and builders can select and use I-joists from various *APA EWS* member manufacturers, using just one set of design and installation criteria. Because PRIs can be selected based on their allowable span for glued uniformly loaded residential floors, it is easy to incorporate them into your design.

This guide emphasizes residential floor systems. However, much of the basic design information can be used for other construction applications. Review by a design professional is required for applications beyond the scope of this document. (See Table 7 for design properties.)

Simple to specify. Easy to install. Less confusion. APA Performance Rated I-Joists are the right choice for residential floor construction.

SAMPLE TRADEMARK – Position of trademark on I-joist may vary by manufacturer

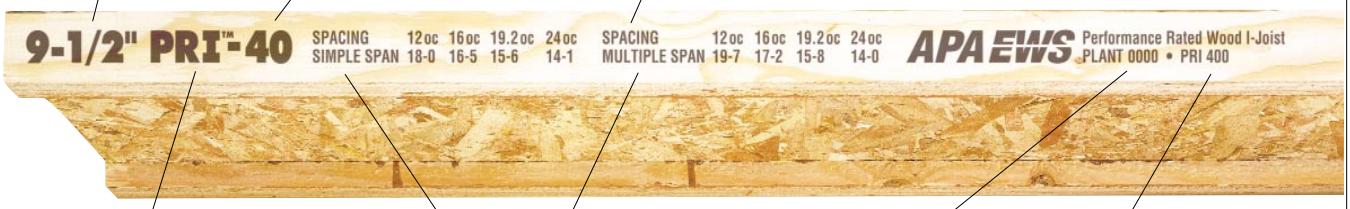

The I-joist alternative to 2 x 10 lumber with a net depth of 9-1/2". Also available in depths of 11-7/8", 14", and 16".

Joist designation

The on-center spacing of the I-joists (optional)

Identifies I-joists as being manufactured in conformance with APA Standard PRI-400, *Performance Standard for APA EWS I-Joists*

The residential floor clear span that can be achieved for a glued-nailed floor system at the indicated spacing for a live load of 40 psf and a dead load of 10 psf (optional)

Plant number

Conforms with APA Standard PRI-400, *Performance Standard for APA EWS I-Joists*

SELECTING APA PERFORMANCE RATED I-JOISTS

Product Description

The APA Performance Rated I-Joist (PRI) is an "I"-shaped engineered wood structural member designed for use in residential floor construction. The product is prefabricated using sawn or structural composite lumber flanges and wood structural panel webs, bonded together with exterior-type adhesives. In order to be classified as an APA PRI, the joist is limited to a L/480 live load maximum deflection (where L = span) for glued-nailed residential floor applications, a criteria which provides superior floor performance.

APA Performance Rated I-joists are identified by their depth followed by a designation such as PRI-30 which relates to the joist strength and stiffness.

APA PRIs are manufactured to strict tolerances with the following characteristics:

- ***Flanges*** are either sawn lumber or structural composite lumber, such as LVL. The top flange is of the same type and grade of material as the bottom flange. The net flange size depends on the material used.
- ***Webs*** consist of wood structural panels, which can be plywood or OSB. All panels are classified as Exposure 1 or Exterior and are 3/8" in thickness or greater.
- All PRIs are assembled using exterior-type **adhesives** per ASTM D 2559.
- APA PRIs are available in four depths: 9-1/2", 11-7/8", 14", and 16".
- PRIs of the same depth are manufactured with various flange widths; flange width is an important design consideration when specifying hangers.
- Most mills supply I-joists to distributors and dealers in lengths up to 60 feet. These are then cut to frequently used lengths such as from 16 to 36 feet in 2 foot increments for jobsite delivery. Check local supplier for availability.

Residential Floor Allowable Spans

The specific PRI designation needed for your application is easily determined by selecting the span needed and then choosing the PRI that meets your span, spacing, and uniform loading criteria.

Tables 1 and 2 are for simple or multiple span applications respectively. The use of these tables will provide maximum spans for the indicated spacings and span conditions.

TABLE 1

ALLOWABLE SPANS FOR *APA EWS* PERFORMANCE RATED I-JOISTS – Simple Span Only[1,2,3,4]

Depth	Joist Designation	Simple Spans On Center Spacing 12"	16"	19.2"	24"
9-1/2"	PRI-20	16'-7"	15'-2"	14'-4"	13'-5"
	PRI-30	17'-1"	15'-8"	14'-10"	13'-10"
	PRI-40	18'-0"	16'-5"	15'-6"	14'-6"
	PRI-50	17'-10"	16'-4"	15'-5"	14'-5"
	PRI-60	18'-11"	17'-4"	16'-4"	15'-3"
11-7/8"	PRI-20	19'-10"	18'-2"	17'-2"	16'-0"
	PRI-30	20'-6"	18'-9"	17'-8"	16'-6"
	PRI-40	21'-5"	19'-7"	18'-6"	16'-8"
	PRI-50	21'-4"	19'-6"	18'-5"	17'-2"
	PRI-60	22'-7"	20'-8"	19'-6"	18'-2"
	PRI-70	23'-0"	21'-0"	19'-10"	18'-6"
	PRI-80	24'-11"	22'-8"	21'-4"	19'-10"
	PRI-90	25'-8"	23'-4"	22'-0"	20'-5"
14"	PRI-40	24'-4"	22'-3"	20'-6"	18'-4"
	PRI-50	24'-4"	22'-2"	21'-0"	19'-7"
	PRI-60	25'-9"	23'-6"	22'-2"	20'-8"
	PRI-70	26'-1"	23'-10"	22'-6"	20'-11"
	PRI-80	28'-3"	25'-9"	24'-3"	22'-7"
	PRI-90	29'-1"	26'-5"	24'-11"	23'-2"
16"	PRI-40	26'-11"	24'-3"	22'-1"	19'-9"
	PRI-50	27'-0"	24'-8"	23'-4"	20'-2"
	PRI-60	28'-6"	26'-0"	24'-7"	22'-10"
	PRI-70	29'-0"	26'-5"	24'-11"	23'-1"
	PRI-80	31'-4"	28'-6"	26'-10"	25'-0"
	PRI-90	32'-2"	29'-3"	27'-7"	25'-7"

Notes:

1. Allowable **clear** span applicable to simple-span residential floor construction with a design dead load of 10 psf and live load of 40 psf. The live load deflection is limited to span/480.
2. Spans are based on a composite floor with glued-nailed sheathing meeting the requirements for APA Rated Sheathing or APA Rated STURD-I-FLOOR conforming to PRP-108, PS 1, or PS 2 with a minimum thickness of 19/32 inch (40/20 or 20 oc) for a joist spacing of 19.2 inches or less, or 23/32 inch (48/24 or 24 oc) for a joist spacing of 24 inches. Adhesive shall meet APA Specification AFG-01 or ASTM D3498. Spans shall be reduced 1 foot when the floor sheathing is nailed only.
3. Minimum bearing length shall be 1-3/4 inches for the end bearings.
4. Bearing stiffeners are **not** required when I-joists are used with the spans and spacings given in this table, except as required for hangers.
5. This span chart is based on uniform loads. For applications with other than uniformly distributed loads, an engineering analysis may be required based on the use of the design properties in Table 7.

To illustrate the selection of an APA PRI product, assume a design simple span of 16 ft-1 in. For architectural reasons limit the joist depth to 11-7/8 inches and joist spacing to 19.2 inches on center. From the 9-1/2" and 11-7/8" entries in Table 1, look down the 19" on center spacing column. For depths of 9-1/2 inch, select **9-1/2" PRI-60,** and from the 11-7/8 inch depths notice that **any** joist designation will work.

While any of the PRIs shown in Tables 1 and 2 may be available in a specific market area, availability of any PRI product should be verified prior to final product selection.

The allowable spans in the tables in this design guide indicate the allowable clear span for various joist spacings under typical residential uniform floor loads (40 psf live load and 10 psf dead load) for glued-nailed systems.

The spans shown in Tables 1 and 2 are based on repetitive member usage which is typical for all wood products spaced 24" on center or less. In addition, floor sheathing must be field glued to the I-joist flanges to achieve the PRI allowable spans. Use of these span tables is limited to uniform load conditions and PRI floor spans shall not exceed these allowable spans. APA PRIs can be used for other applications such as roofs, to support line loads or concentrated loads, etc., when properly engineered using the appropriate design properties in Table 7.

TABLE 2

ALLOWABLE SPANS FOR *APA EWS* PERFORMANCE RATED I-JOISTS – Multiple Span Only(1,2,3,4)

Depth	Joist Designation	Multiple Spans On Center Spacing 12"	16"	19.2"	24"
9-1/2"	PRI-20	18'-1"	16'-6"	15'-7"	13'-5"
	PRI-30	18'-7"	17'-0"	16'-1"	15'-0"
	PRI-40	19'-7"	17'-11"	16'-4"	14'-7"
	PRI-50	19'-5"	17'-9"	16'-9"	15'-7"
	PRI-60	20'-8"	18'-10"	17'-9"	16'-6"
11-7/8"	PRI-20	21'-8"	19'-7"	16'-9"	13'-5"
	PRI-30	22'-4"	20'-5"	18'-10"	15'-0"
	PRI-40	23'-5"	20'-5"	18'-7"	16'-7"
	PRI-50	23'-3"	21'-2"	20'-0"	16'-1"
	PRI-60	24'-8"	22'-6"	21'-2"	19'-7"
	PRI-70	25'-1"	22'-10"	21'-7"	18'-6"
	PRI-80	27'-1"	24'-8"	23'-3"	21'-7"
	PRI-90	27'-11"	25'-5"	23'-11"	22'-2"
14"	PRI-40	25'-11"	22'-5"	20'-5"	18'-3"
	PRI-50	26'-6"	24'-2"	20'-2"	16'-1"
	PRI-60	28'-0"	25'-7"	24'-1"	19'-9"
	PRI-70	28'-5"	25'-11"	23'-2"	18'-6"
	PRI-80	30'-10"	28'-0"	26'-5"	23'-11"
	PRI-90	31'-8"	28'-10"	27'-1"	25'-2"
16"	PRI-40	27'-11"	24'-2"	22'-0"	19'-8"
	PRI-50	29'-6"	24'-3"	20'-2"	16'-1"
	PRI-60	31'-1"	28'-4"	24'-9"	19'-9"
	PRI-70	31'-7"	27'-10"	23'-2"	18'-6"
	PRI-80	34'-2"	31'-1"	29'-3"	23'-11"
	PRI-90	35'-1"	31'-10"	30'-0"	26'-7"

Notes:

1. Allowable **clear** span applicable to multiple-span residential floor construction with a design dead load of 10 psf and live load of 40 psf. The live load deflection is limited to span/480. The end spans shall be 40% or more of the adjacent span.

2. Spans are based on a composite floor with glued-nailed sheathing meeting the requirements for APA Rated Sheathing or APA Rated STURD-I-FLOOR conforming to PRP-108, PS 1, or PS 2 with a minimum thickness of 19/32 inch (40/20 or 20 oc) for a joist spacing of 19.2 inches or less, or 23/32 inch (48/24 or 24 oc) for a joist spacing of 24 inches. Adhesive shall meet APA Specification AFG-01 or ASTM D3498. Spans shall be reduced 1 foot when the floor sheathing is nailed only.

3. Minimum bearing length shall be 1-3/4 inches for the end bearings, and 3-1/2 inches for the intermediate bearings.

4. Bearing stiffeners are **not** required when I-joists are used with the spans and spacings given in this table, except as required for hangers.

5. This span chart is based on uniform loads. For applications with other than uniformly distributed loads, an engineering analysis may be required based on the use of the design properties in Table 7.

TYPICAL FLOOR FRAMING AND CONSTRUCTION DETAILS

(See *I-Joist Construction Details,* Form D710 for roof framing and construction details)

Installation Notes:

1. Installation of APA PRIs shall be as shown in Figure 1.
2. Except for cutting to length, I-joist flanges should **never** be cut, drilled, or notched.
3. Install I-joists so that top and bottom flanges are within 1/2 inch of true vertical alignment.
4. Concentrated loads should only be applied to the top surface of the top flange. At no time should concentrated loads be suspended from the bottom flange with the exception of light loads such as ceiling fans, light fixtures, etc.
5. I-joists must be protected from the weather prior to installation.
6. I-joists must not be used in applications where they will be permanently exposed to weather, or will reach a moisture content greater than 16% such as in swimming pool or hot tub areas. They must not be installed where they will remain in direct contact with concrete or masonry.
7. End bearing length must be at least 1-3/4 inches. For multiple span joists, intermediate bearing length must be at least 3-1/2 inches.
8. Ends of floor joists shall be restrained to prevent rollover. Use APA Performance Rated™ Rim Board or I-joist blocking panels.
9. I-joists installed beneath bearing walls perpendicular to the joists shall have full depth blocking panels, APA Performance Rated Rim Board, or squash blocks (cripple blocks) to transfer gravity loads from above the floor system to the wall or foundation below.
10. For I-joists installed directly beneath bearing walls parallel to the joists or used as rim board or blocking panels, the maximum allowable vertical load using a single I-joist is 2,000 plf, and 4,000 plf if double I-joists are used.
11. Continuous lateral support of the I-joist's compression flange is required to prevent rotation and buckling. In simple span uses, lateral support of the top flange is normally supplied by the floor sheathing. In multiple span or cantilever applications, bracing of the I-joist's bottom flange is also required at interior supports of multiple-span joists, and at the end support next to the cantilever extension. The ends of all cantilever extensions must be laterally braced as shown in Figure 3, 4 or 5a.
12. Nails installed perpendicular to the wide face of the flange shall be spaced in accordance with the applicable building code requirements or approved building plans but should not be closer than 3" o.c. for 8d nails used with a minimum flange width of 2-5/16" or 6" o.c. for 8d nails with a flange width of less than 2-5/16" and for 10d nails with any flange width. If more than one row of nails is used (not permitted for I-joists with composite flanges 1-1/2" wide) the rows must be offset at least 1/2 inch. Nails installed parallel to the wide face of the veneers in LVL flanges shall not be spaced closer than 3 inches o.c. for 8d common nails, and 6 inches o.c. for 10d common nails.
13. Figure 1 details on the following pages show only I-joist-specific fastener requirements. For other fastener requirements, see the applicable building code.

FIGURE 1

TYPICAL PERFORMANCE RATED I-JOIST FLOOR FRAMING AND CONSTRUCTION

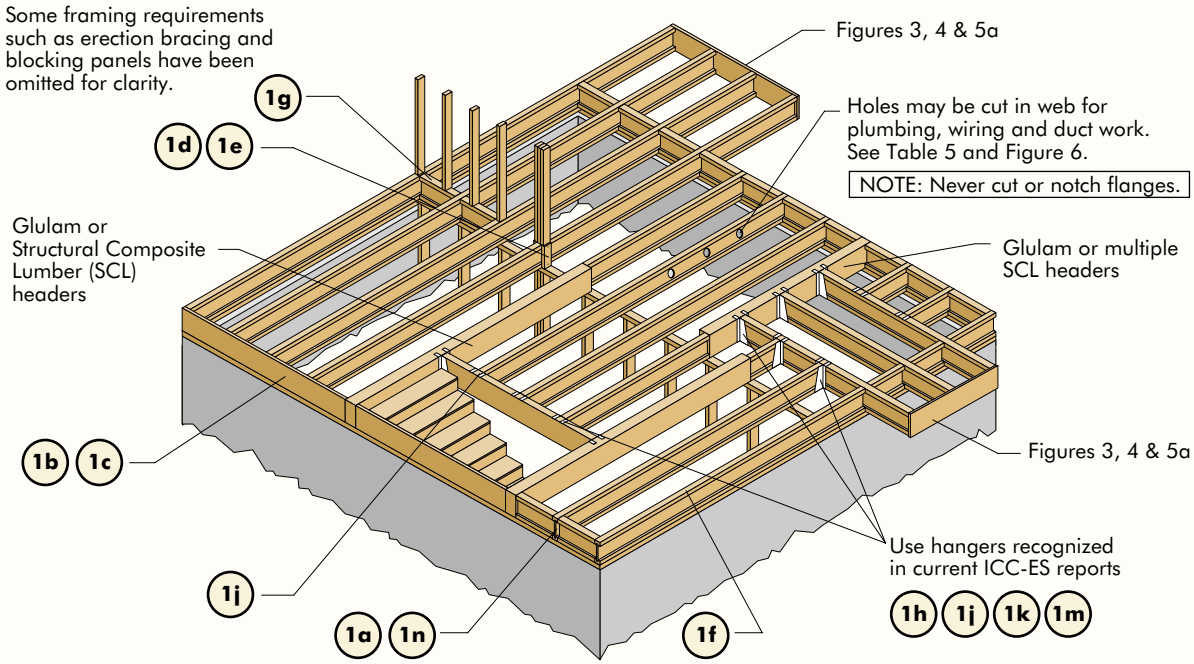

1a

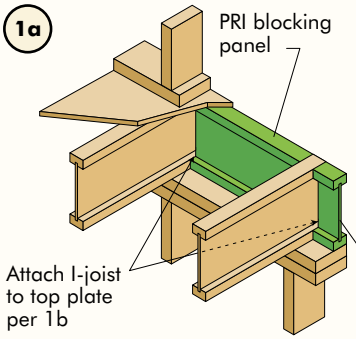

Blocking Panel or Rim Joist	Uniform Vertical Load Transfer Capacity* (plf)
PRI Joists	2000

*The uniform vertical load capacity is limited to a joist depth of 16 inches or less and is based on the normal (10-yr) load duration. It shall not be used in the design of a bending member, such as joist, header, or rafter. For concentrated vertical load transfer capacity, see 1d.

8d nails @ 6" o.c. to top plate (when used for lateral shear transfer, nail to bearing plate with same nailing as required for decking)

1b

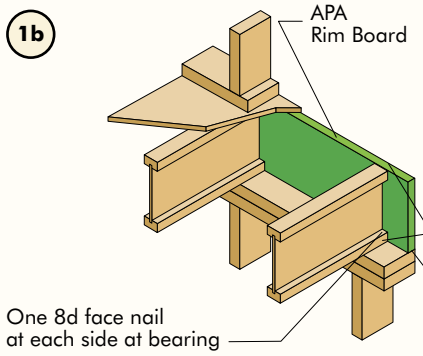

Blocking Panel or Rim Joist	Uniform Vertical Load Transfer Capacity* (plf)
1-1/8" APA Rim Board Plus	4850
1-1/8" APA Rim Board	4400
1" APA Rim Board	3300

*The uniform vertical load capacity is limited to a rim board depth of 16 inches or less and is based on the normal (10-yr) load duration. It shall not be used in the design of a bending member, such as joist, header, or rafter. For concentrated vertical load transfer capacity, see 1d.

One 8d common or box nail at top and bottom flange

Attach APA Rim Board to top plate using 8d common or box toenails @ 6" o.c.

To avoid splitting flange, start nails at least 1-1/2" from end of I-joist. Nails may be driven at an angle to avoid splitting of bearing plate.

All nails shown in the details above are assumed to be common nails unless otherwise noted. 10d box nails may be substituted for 8d common shown in details. Individual components not shown to scale for clarity.

1c

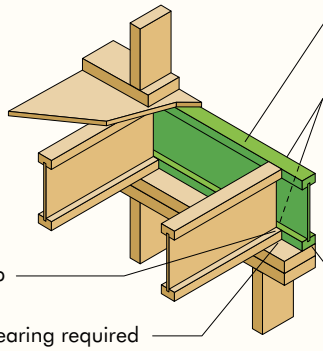

1d

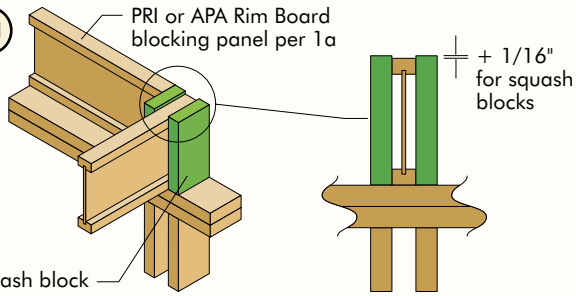

Pair of Squash Blocks	Vertical load transfer capacity per pair of squash blocks (lb)	
	3-1/2" wide	5-1/2" wide
2x lumber	4000	7000
1-1/8" APA Rim Board, Rim Board Plus, or Rated Sturd-I-Floor 48 oc	3000	3500
1" APA Rim Board or Rated Sturd-I-Floor 32 oc	2700	3500

Provide lateral bracing per 1a, 1b, or 1c

1e

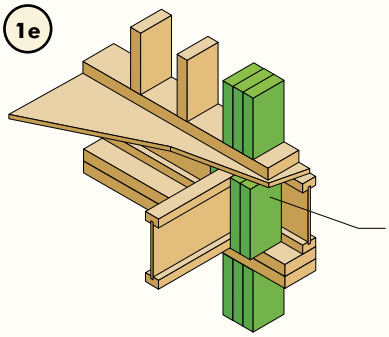

1f

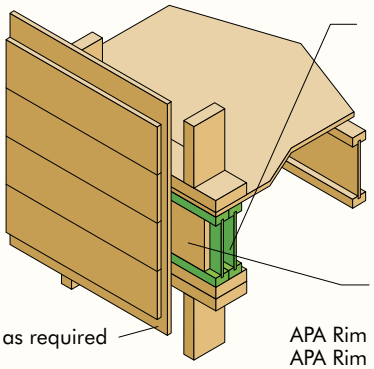

All nails shown in the details above are assumed to be common nails unless otherwise noted. 10d box nails may be substituted for 8d common shown in details. Individual components not shown to scale for clarity.

1g

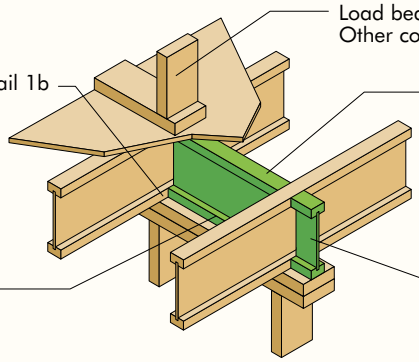

1h

Backer block (use if hanger load exceeds 250 lbs.)
Before installing a backer block to a double I-joist, drive 3 additional 10d nails through the webs and filler block where the backer block will fit. Clinch. Install backer tight to top flange. Use twelve 10d nails, clinched when possible. Maximum capacity for hanger for this detail = 1280 lbs.

BACKER BLOCKS (Blocks must be long enough to permit required nailing without splitting)

Flange Width	Material Thickness Required*	Minimum Depth**
1-1/2"	19/32"	5-1/2"
1-3/4"	23/32"	5-1/2"
2-5/16"	1"	7-1/4"
2-1/2"	1"	5-1/2"
3-1/2"	1-1/2"	7-1/4"

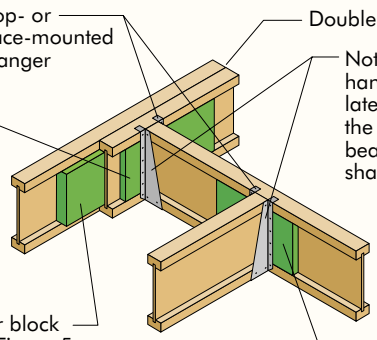

For hanger capacity see hanger manufacturer's recommendations. Verify double I-joist capacity to support concentrated loads.

* Minimum grade for backer block material shall be Utility grade SPF (south) or better for solid sawn lumber and Rated Sheathing grade for wood structural panels.
** For face-mount hangers use net joist depth minus 3-1/4" for joists with 1-1/2" thick flanges. For 1-5/16" thick flanges use net depth minus 2-7/8".

1j

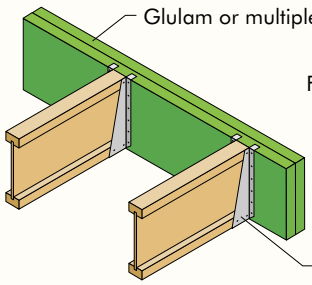

Note: Unless hanger sides laterally support the top flange, bearing stiffeners shall be used.

All nails shown in the details above are assumed to be common nails unless otherwise noted. 10d box nails may be substituted for 8d common shown in details. Individual components not shown to scale for clarity.

1k

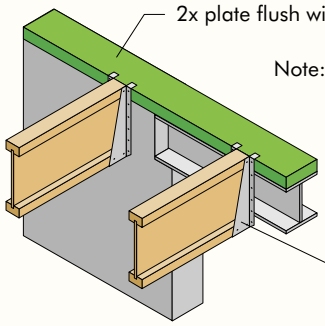

1m

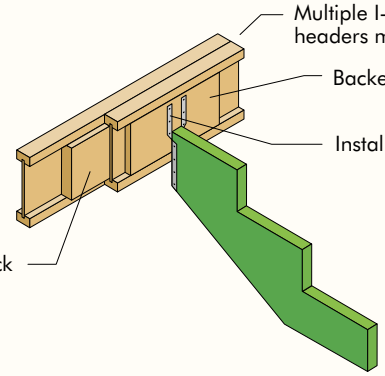

1n

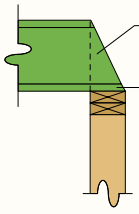

All nails shown in the details above are assumed to be common nails unless otherwise noted. 10d box nails may be substituted for 8d common shown in details. Individual components not shown to scale for clarity.

I-JOIST WEB STIFFENERS

A web stiffener is a wood block that is used to reinforce the web of an I-joist at locations where:

- The webs of the I-joist are in jeopardy of buckling out of plane. This usually occurs in deeper I-joists.
- The webs of the I-joist are in jeopardy of "knifing" through the I-joist flanges. This can occur at any I-joist depth when the design reaction loads exceed a specific level.
- The I-joist is supported in a hanger and the sides of the hanger do not extend up to the top flange. With the top flange unsupported by the hanger sides, the joist may deflect laterally, putting a twist in the flange of the joist. The web stiffener supports the I-joist along a vertical axis as designed. (In this application, the web stiffener acts very much like a backer block.)

There are two kinds of web stiffeners: ***bearing stiffeners*** and ***load stiffeners.*** They are differentiated by the applied load and the location of the gap between the slightly undersized stiffener and the top or bottom flange. See Figure 2.

Bearing stiffeners are located at the reactions, both interior and exterior, when required. PRIs ***do not*** need bearing stiffeners at any support when subjected to the normal residential uniform loads and installed in accordance with the allowable spans printed on the I-joist or in this document.

Load stiffeners are located between supports where significant point loads are applied to the top flange of an I-joist.

Physical description:

Web stiffener blocks may be comprised of lumber, APA Rim Board, or wood structural panels. The minimum grade of wood structural panels is Rated Sheathing; minimum lumber grade is Utility grade SPF (south) or better.

Ideally, the depth of the web stiffener should equal the distance between the flanges of the joist minus 1/8 inch – 1/4 inch. For ***bearing stiffeners,*** this gap is placed between the stiffener and the bottom of the top flange. For ***load stiffeners,*** the gap is located at the bottom of the stiffener.

Recommendations for I-joists designed in accordance with APA Standard PRI-400:

1. A ***bearing stiffener*** is required in all engineered applications with design end reactions greater than 1550 lbs, with the exceptions of PRI-90, which requires bearing stiffeners when end reaction values exceed 1,885 lbs. The gap between the stiffener and the flange is at the top.

2. A ***load stiffener*** is required at locations where a concentrated load greater than the lesser of the allowable shear or 1500 lbs is applied to the top flange between supports, or in the case of a cantilever, anywhere between the cantilever tip and the support. These values are for normal duration of load, and may be adjusted for other load durations as permitted by the code. The gap between the stiffener and the flange is at the bottom.

3. A ***bearing stiffener*** is required when the I-joist is supported in a hanger and the sides of the hanger do not extend up to, and support, the top flange. The gap between the stiffener and flange is at the top.

TABLE 3

STIFFENER SIZE REQUIREMENTS

PRI Flange Width	Web Stiffener Size Each Side of Web
1-1/2"	15/32" x 2-5/16" minimum width
1-3/4"	19/32" x 2-5/16" minimum width
2-5/16"	1" x 2-5/16" minimum width
2-1/2"	1" x 2-5/16" minimum width
3-1/2"	1-1/2" x 2-5/16" minimum width

FIGURE 2

WEB STIFFENER INSTALLATION DETAILS

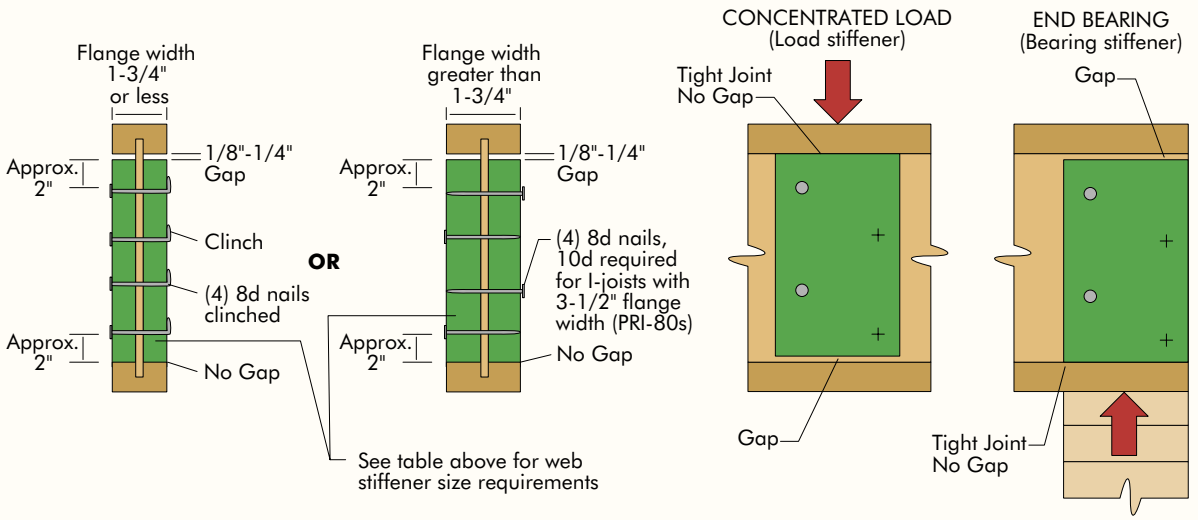

Cantilever Details for Balconies (No Wall Load)

Balconies may be constructed using either continuous APA PRIs (Figure 3) or by adding lumber extensions (Figure 4) to the I-joist. Continuous I-joist cantilevers are limited to one-fourth the adjacent span when supporting uniform loads only. For applications supporting concentrated loads at the end of the cantilever, such as a wall, see Figures 5a and 5b.

Unless otherwise engineered, cantilevers are limited to a maximum of 4 feet when supporting uniform loads only. Blocking is required at the cantilever support as shown.

Uniform floor load shall not exceed 40 psf live load and 10 psf dead load. The balcony load shall not exceed 60 psf live load and 10 psf dead load.

FIGURE 3

I-JOIST CANTILEVER DETAIL FOR BALCONIES

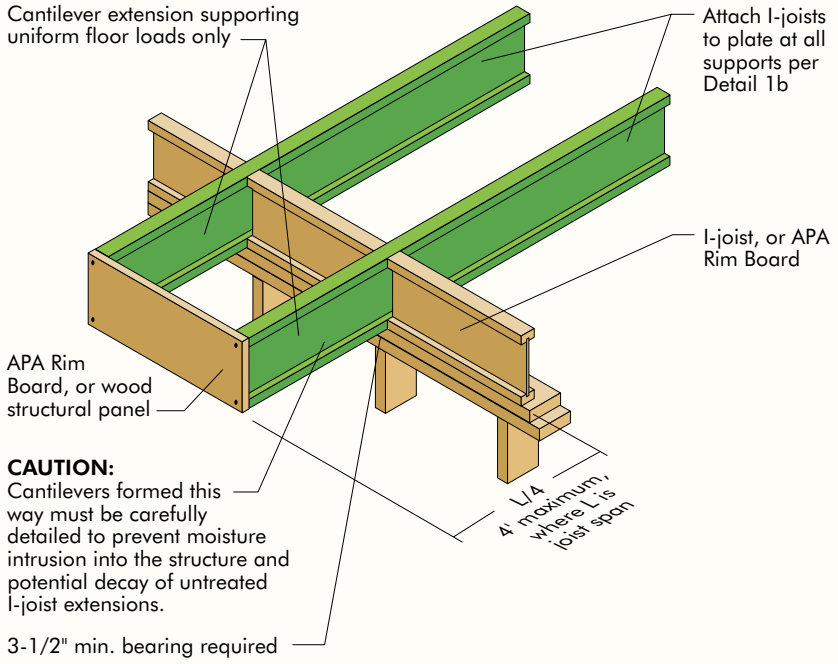

FIGURE 4

LUMBER CANTILEVER DETAIL FOR BALCONIES

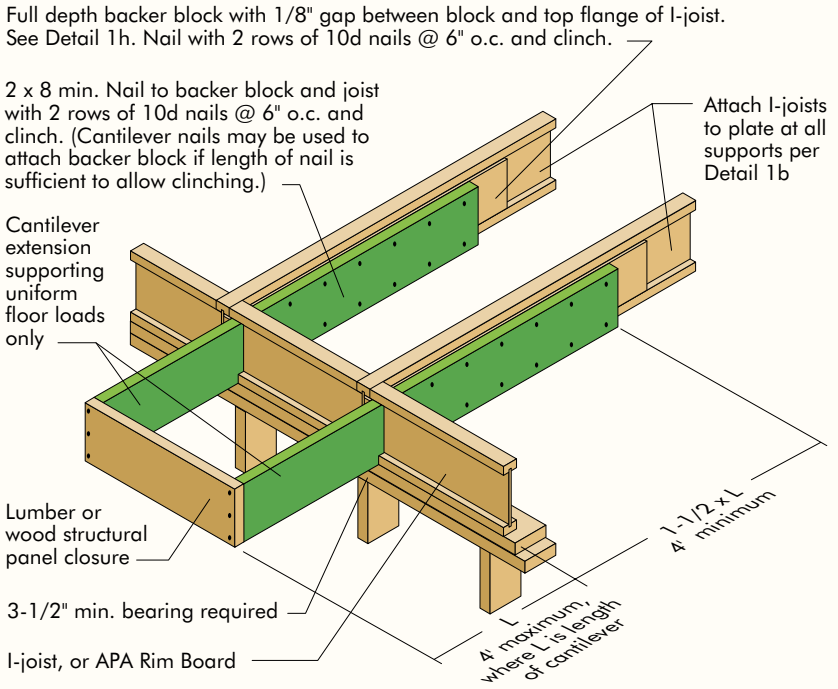

Cantilever Details for Vertical Building Offset (Concentrated Wall Load)

I-joists may also be used in cantilever applications supporting a concentrated load applied to the end of the cantilever, such as with a vertical building offset. For cantilever-end concentrated load applications that require reinforcing based on Table 4, the cantilever is limited to 2 feet maximum. In addition, blocking is required along the cantilever support and for 4 feet on each side of the cantilever area. Subject to the roof loads and layout (see Table 4), three methods of reinforcing are allowed in load bearing cantilever applications: reinforcing sheathing applied to one side of the I-joist (Method 1), reinforcing sheathing applied to both sides of the joist (Method 2) ***or*** double I-joists (Alternate Method 2).

FIGURE 5a

CANTILEVER DETAIL FOR FOR VERTICAL BUILDING OFFSET

Method 1
SHEATHING REINFORCEMENT ONE SIDE

Method 2
SHEATHING REINFORCEMENT TWO SIDES

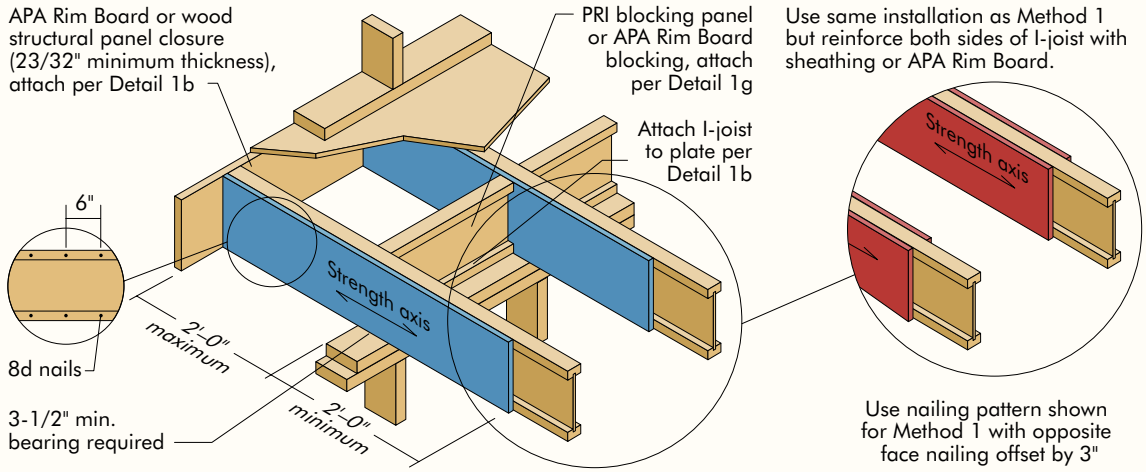

Note: APA RATED SHEATHING 48/24 (minimum thickness 23/32") required on sides of joist. Depth shall match the full height of the joist. Nail with 8d nails at 6" o.c., top and bottom flange. Install with face grain horizontal. Attach I-joist to plate at all supports per Detail 1b

Alternate Method 2
DOUBLE I-JOIST

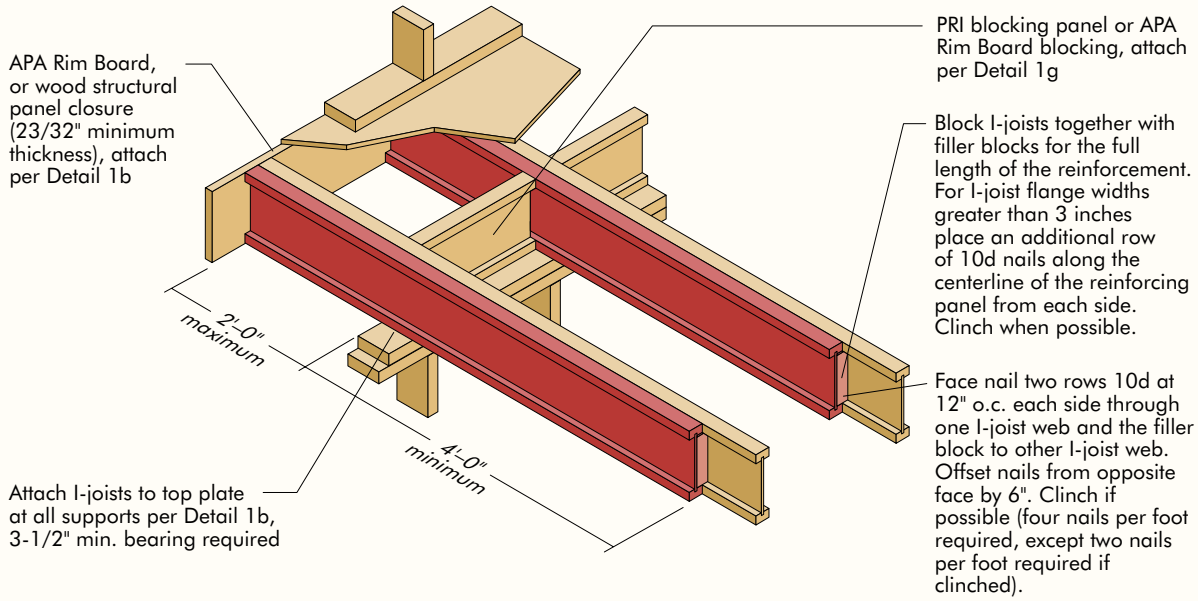

FIGURE 5b

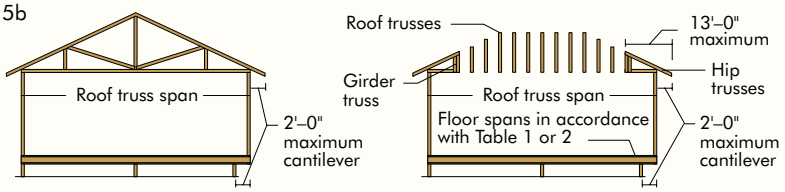

See Table below for APA PRI reinforcement requirements at cantilever.

For hip roofs with the hip trusses running parallel to the cantilevered floor joists, the I-joist reinforcement requirements for a span of 26 ft. shall be permitted to be used.

TABLE 4

PRI CANTILEVER REINFORCEMENT METHODS ALLOWED

Joist Depth (in.)	Roof Truss Span (ft)	ROOF LOADINGS: TL = 35 psf, LL not to exceed 20 psf — Joist Spacing (in.) 12	16	19.2	24	TL = 45 psf, LL not to exceed 30 psf — Joist Spacing (in.) 12	16	19.2	24	TL = 55 psf, LL not to exceed 40 psf — Joist Spacing (in.) 12	16	19.2	24
9-1/2	26	N	N	N	1,2	N	N	1,2	2	N	1,2	2	X
	28	N	N	1,2	1,2	N	N	1,2	2	N	1,2	2	X
	30	N	N	1,2	1,2	N	1,2	1,2	2	N	1,2	2	X
	32	N	N	1,2	2	N	1,2	1,2	X	N	1,2	2	X
	34	N	N	1,2	2	N	1,2	2	X	N	2	X	X
	36	N	N	1,2	2	N	1,2	2	X	N	2	X	X
11-7/8	26	N	N	N	1,2	N	N	1,2	1,2	N	1,2	1,2	2
	28	N	N	1,2	1,2	N	1,2	1,2	1,2	N	1,2	1,2	2
	30	N	N	1,2	1,2	N	1,2	1,2	2	N	1,2	1,2	2
	32	N	N	1,2	1,2	N	1,2	1,2	2	N	1,2	1,2	2
	34	N	N	1,2	1,2	N	1,2	1,2	2	N	1,2	2	2
	36	N	N	1,2	1,2	N	1,2	1,2	2	N	1,2	2	2
	38	N	1,2	1,2	2	N	1,2	1,2	2	1,2	1,2	2	X
14	26	N	N	N	1,2	N	N	N	1,2	N	N	1,2	1,2
	28	N	N	N	1,2	N	N	1,2	1,2	N	N	1,2	2
	30	N	N	N	1,2	N	N	1,2	1,2	N	1,2	1,2	2
	32	N	N	N	1,2	N	N	1,2	1,2	N	1,2	1,2	2
	34	N	N	N	1,2	N	N	1,2	2	N	1,2	1,2	2
	36	N	N	1,2	1,2	N	1,2	1,2	2	N	1,2	1,2	2
	38	N	N	1,2	1,2	N	1,2	1,2	2	N	1,2	1,2	2
	40	N	N	1,2	1,2	N	1,2	1,2	2	N	1,2	2	2
16	26	N	N	N	1,2	N	N	1,2	1,2	N	N	1,2	1,2
	28	N	N	N	1,2	N	N	1,2	1,2	N	1,2	1,2	2
	30	N	N	N	1,2	N	N	1,2	1,2	N	1,2	1,2	2
	32	N	N	N	1,2	N	N	1,2	1,2	N	1,2	1,2	2
	34	N	N	1,2	1,2	N	N	1,2	2	N	1,2	1,2	2
	36	N	N	1,2	1,2	N	1,2	1,2	2	N	1,2	1,2	2
	38	N	N	1,2	1,2	N	1,2	1,2	2	N	1,2	2	2
	40	N	N	1,2	1,2	N	1,2	1,2	2	N	1,2	2	2
	42	N	N	1,2	1,2	N	1,2	1,2	2	N	1,2	2	X

Notes

1. N = No reinforcement required.
   1 = PRIs reinforced with 23/32" wood structural panel on one side only.
   2 = PRIs reinforced with 23/32" wood structural panel on both sides or double I-joist.
   X = Try a deeper joist or closer spacing.
2. Color coding in Table is matched to details in Figure 5a.
3. Maximum load shall be: 15 psf roof dead load, 50 psf floor total load, and 80 plf wall load. Wall load is based on 3'-0" maximum width window or door openings. For larger openings, or multiple 3'-0" width openings spaced less than 6'-0" o.c., additional joists beneath the opening's cripple studs may be required.
4. Table applies to joists 12" to 24" o.c. Use 12" o.c. requirements for lesser spacings.
5. For conventional roof construction using a ridge beam, the Roof Truss Span column above is equivalent to the distance between the supporting wall and the ridge beam. When the roof is framed using a ridge board, the Roof Truss Span is equivalent to the distance between the supporting walls as if a truss is used.

WEB HOLE SPECIFICATIONS

One of the benefits of using I-joists in residential floor construction is that holes may be cut in the joist webs to accommodate electrical wiring, plumbing lines and other mechanical systems, therefore minimizing the depth of the floor system.

Rules for cutting holes in PRI Joists

1. The distance between the inside edge of the support and the centerline of any hole shall be in compliance with the requirements of Table 5.
2. I-joist top and bottom flanges must NEVER be cut, notched, or otherwise modified.
3. Whenever possible field-cut holes should be centered on the middle of the web.
4. The maximum size hole that can be cut into an I-joist web shall equal the clear distance between the flanges of the I-joist minus 1/4 inch. A minimum of 1/8 inch should always be maintained between the top or bottom of the hole and the adjacent I-joist flange.
5. The sides of square holes or longest sides of rectangular holes should not exceed three fourths of the diameter of the maximum round hole permitted at that location.
6. Where more than one hole is necessary, the distance between adjacent hole edges shall exceed twice the diameter of the largest round hole or twice the size of the largest square hole *(or twice the length of the longest side of the longest rectangular hole)* and each hole must be sized and located in compliance with the requirements of Table 5.
7. A knockout is ***not*** considered a hole, may be utilized anywhere it occurs and may be ignored for purposes of calculating minimum distances between holes.
8. One and one-half inch holes shall be permitted anywhere in a cantilevered section of a PRI Joist. Holes of greater size may be permitted subject to verification.
9. A 1-1/2" hole can be placed anywhere in the web provided that it meets the requirements of 6 above.
10. For joists with more than one span, use the longest span to determine hole location in either span.
11. All holes shall be cut in a workman-like manner in accordance with the restrictions listed above and as illustrated in Figure 6.
12. Limit 3 maximum size holes per span.
13. A group of round holes at approximately the same location shall be permitted if they meet the requirements for a single round hole circumscribed around them.

FIGURE 6

PRI JOIST TYPICAL HOLES

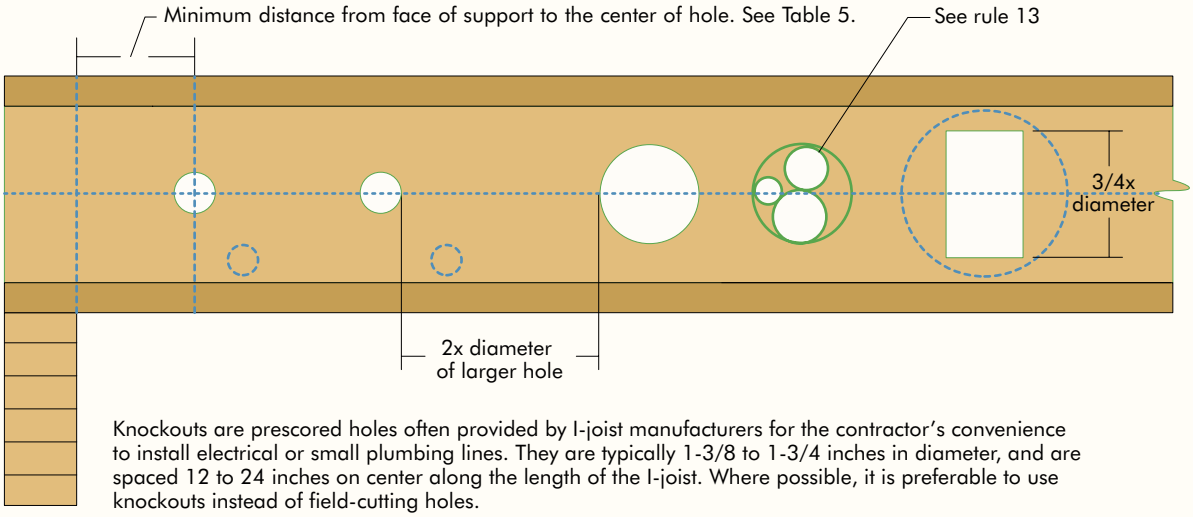

Knockouts are prescored holes often provided by I-joist manufacturers for the contractor's convenience to install electrical or small plumbing lines. They are typically 1-3/8 to 1-3/4 inches in diameter, and are spaced 12 to 24 inches on center along the length of the I-joist. Where possible, it is preferable to use knockouts instead of field-cutting holes.

- Never drill, cut or notch the flange, or over-cut the web.
- Holes in webs should be cut with a sharp saw.
- For rectangular holes, avoid over cutting the corners, as this can cause unnecessary stress concentrations. Slightly rounding the corners is recommended. Starting the rectangular hole by drilling a 1" diameter hole in each of the 4 corners and then making the cuts between the holes is another good method to minimize damage to I-joist.

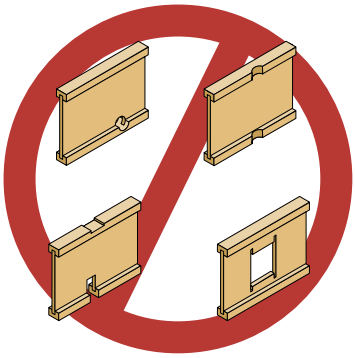

TABLE 5

HOLE SIZES AND LOCATIONS

Minimum Distance from Face of All Joist Supports to Center of Hole – Single or Multi-Span, 10 psf dead load and 40 psf live load

Joist Depth	Joist Designation	Span Adjustment Factor	Minimum Distance from Inside Face of Any Support to Center of Hole (ft - in.)														
			Round Hole Diameter (in.)														
			2	3	4	5	6	6-1/4	7	8	8-5/8	9	10	10-3/4	11	12	12-3/4
9-1/2"	PRI-20	13'-5"	0'-6"	1'-0"	2'-6"	3'-6"	5'-6"	6'-0"									
	PRI-30	15'-0"	1'-0"	2'-0"	3'-6"	5'-0"	6'-6"	6'-6"									
	PRI-40	14'-7"	0'-6"	2'-0"	3'-0"	4'-6"	6'-0"	6'-6"									
	PRI-50	15'-7"	1'-6"	2'-6"	4'-0"	5'-0"	6'-6"	7'-0"									
	PRI-60	16'-6"	2'-0"	3'-0"	4'-6"	6'-0"	7'-6"	8'-0"									
11-7/8"	PRI-20	13'-5"	0'-6"	0'-6"	0'-6"	0'-6"	2'-0"	2'-6"	4'-0"	6'-0"	7'-6"						
	PRI-30	15'-0"	0'-6"	0'-6"	0'-6"	2'-0"	3'-6"	4'-0"	5'-0"	7'-0"	8'-0"						
	PRI-40	16'-7"	0'-6"	0'-6"	1'-6"	2'-6"	4'-0"	4'-6"	5'-6"	7'-0"	8'-0"						
	PRI-50	16'-1"	0'-6"	0'-6"	1'-0"	2'-6"	4'-6"	4'-6"	6'-0"	8'-0"	9'-0"						
	PRI-60	19'-7"	1'-0"	2'-0"	3'-6"	4'-6"	6'-0"	6'-6"	7'-6"	9'-0"	10'-0"						
	PRI-70	18'-6"	0'-6"	1'-6"	2'-6"	4'-0"	5'-6"	6'-0"	7'-0"	9'-0"	10'-6"						
	PRI-80	21'-7"	2'-0"	3'-6"	4'-6"	6'-0"	7'-6"	8'-0"	9'-0"	10'-6"	11'-6"						
	PRI-90	22'-2"	0'-6"	0'-6"	1'-6"	3'-0"	5'-0"	5'-6"	7'-0"	9'-0"	10'-0"						
14"	PRI-40	18'-3"	0'-6"	0'-6"	0'-6"	1'-0"	2'-0"	2'-6"	3'-6"	5'-0"	5'-6"	6'-0"	8'-0"	9'-6"			
	PRI-50	16'-1"	0'-6"	0'-6"	0'-6"	0'-6"	1'-0"	1'-6"	2'-6"	4'-6"	6'-0"	7'-0"	9'-0"	11'-0"			
	PRI-60	19'-9"	0'-6"	0'-6"	0'-6"	2'-0"	3'-6"	3'-6"	5'-0"	6'-6"	8'-0"	8'-6"	10'-6"	12'-0"			
	PRI-70	18'-6"	0'-6"	0'-6"	0'-6"	1'-0"	2'-6"	3'-0"	4'-6"	6'-0"	7'-0"	8'-0"	10'-6"	12'-0"			
	PRI-80	23'-11"	0'-6"	2'-0"	3'-0"	4'-6"	6'-0"	6'-6"	7'-6"	9'-0"	10'-0"	10'-6"	12'-6"	14'-0"			
	PRI-90	25'-2"	0'-6"	0'-6"	1'-0"	2'-6"	4'-0"	4'-6"	6'-0"	7'-6"	8'-6"	9'-6"	11'-6"	13'-0"			
16"	PRI-40	19'-8"	0'-6"	0'-6"	0'-6"	0'-6"	0'-6"	0'-6"	1'-6"	3'-0"	4'-0"	4'-6"	5'-6"	7'-0"	7'-0"	9'-0"	11'-0"
	PRI-50	16'-1"	0'-6"	0'-6"	0'-6"	0'-6"	0'-6"	0'-6"	0'-6"	1'-0"	2'-0"	2'-6"	4'-6"	6'-0"	7'-0"	10'-0"	12'-0"
	PRI-60	19'-9"	0'-6"	0'-6"	0'-6"	0'-6"	0'-6"	1'-0"	2'-0"	3'-6"	4'-6"	5'-6"	7'-6"	9'-0"	9'-6"	12'-0"	14'-0"
	PRI-70	18'-6"	0'-6"	0'-6"	0'-6"	0'-6"	0'-6"	0'-6"	1'-0"	3'-0"	4'-6"	5'-0"	7'-0"	9'-0"	9'-6"	11'-6"	13'-6"
	PRI-80	23'-11"	0'-6"	0'-6"	0'-6"	2'-0"	3'-6"	4'-0"	5'-0"	6'-6"	8'-0"	8'-6"	10'-6"	12'-0"	12'-6"	14'-6"	16'-0"
	PRI-90	26'-7"	0'-6"	0'-6"	0'-6"	1'-0"	2'-6"	3'-0"	4'-0"	5'-6"	6'-6"	7'-6"	9'-0"	10'-6"	11'-0"	13'-6"	15'-6"

Notes:

1. Above tables may be used for I-joist spacing of 24 inches on center or less.
2. Hole location distance is measured from inside face of supports to center of hole.
3. Distances in this chart are based on uniformly loaded joists that meet the span requirements (see Tables 1 and 2).
4. For continuous joists with more than one span, use the longest span to determine hole location in either span.

OPTIONAL:

Table 5 is based on the I-joists being used at their maximum span. If the I-joists are placed at less than their full allowable span (see Tables 1 or 2), the maximum distance from the centerline of the hole to the face of any support (D) as given above may be reduced as follows:

$$D_{reduced} = \frac{L_{actual}}{SAF} \times D$$

Where: $D_{reduced}$ = Distance from the inside face of any support to center of hole, reduced for less-than-maximum span applications (ft).

L_{actual} = The actual measured span distance between the inside faces of supports (ft).

SAF = Span Adjustment Factor given in Table 5.

D = The minimum distance from the inside face of any support to center of hole from Table 5 above (ft).

If $\frac{L_{actual}}{SAF}$ is greater than 1, use 1 in the above calculation for $\frac{L_{actual}}{SAF}$.

When calculating hole locations by this optional method, the following minimum distances between the center of the hole and the inside face of the support apply:

Hole Diameter in inches	2	3	4	5	6	6.25	7	8	8.63	9	10	10.75	11	12	12.75
Minimum Distance in feet	0.5	0.5	1	1	1	1.5	1.5	1.5	1.5	1.5	1.5	1.5	1.5	1.5	2

RIM BOARD HOLE SPECIFICATIONS

The maximum allowable hole size for an APA Rim Board shall be 2/3 of the Rim Board depth as shown below. The length of the Rim Board segment containing a hole shall be at least 8 times the hole size.

TABLE 6

RIM BOARD HOLE SIZES AND MINIMUM LENGTH

Rim Board Depth (in.)	Maximum Allowable Hole Size[(a)(b)] (in.)	Minimum Length of Rim Board Segment[(c)] for the Maximum Allowable Hole Size (in.)
9-1/2	6-1/4	50
11-7/8	7-3/4	62
14	9-1/4	74
16	10-1/2	84

(a) These hole provisions do not apply to Rim Board installed over openings, such as doors or windows.

(b) The diameter of a round hole or the longer dimension of a rectangular hole.

(c) The length of Rim Board segment per wall line. For multiple holes, the minimum length of Rim Board segment shall be 8 times the sum of all hole sizes.

Application Notes

1. Do not cut holes in Rim Board installed over openings, such as doors or windows, where the Rim Board is not fully supported, except that holes of 1-1/2 inches or less in size are permitted provided they are positioned at the mid-depth and in the middle 1/3 of the span (see Note 5 for minimum hole spacing).

FIGURE 7

RIM BOARD OVER AN OPENING

Do not cut holes in Rim Board over opening except for holes of 1-1/2" or less in size (see Note 1).

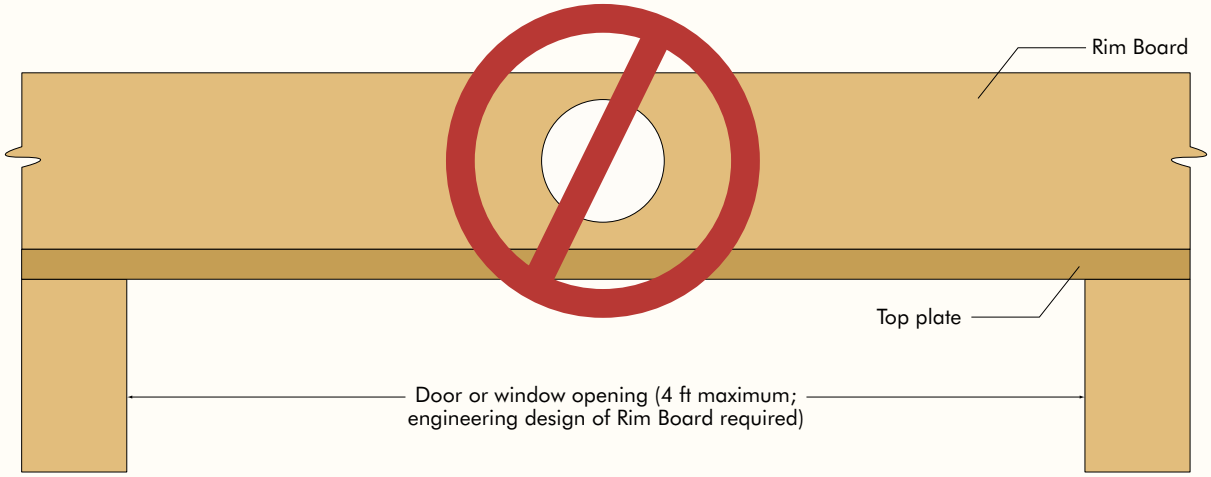

2. Field-cut holes should be vertically centered in the Rim Board and at least one hole diameter or 6 inches, whichever is less, clear distance away from the end of the wall line. Holes should never be placed such that they interfere with the attachment of the Rim Board to the ends of the floor joist, or any other code-required nailing.

3. While round holes are preferred, rectangular holes may be used providing the corners are not over-cut. Slightly rounding corners or pre-drilled corners with a 1-inch-diameter bit is recommended.

4. When concentrated loads are present on the Rim Board (loads not supported by any other vertical-load-carrying members such as squash blocks), holes should not be placed in the Rim Board within a distance equal to the depth of the Rim Board from the area of loading.

FIGURE 8

RIM BOARD NEAR CONCENTRATED VERTICAL LOAD

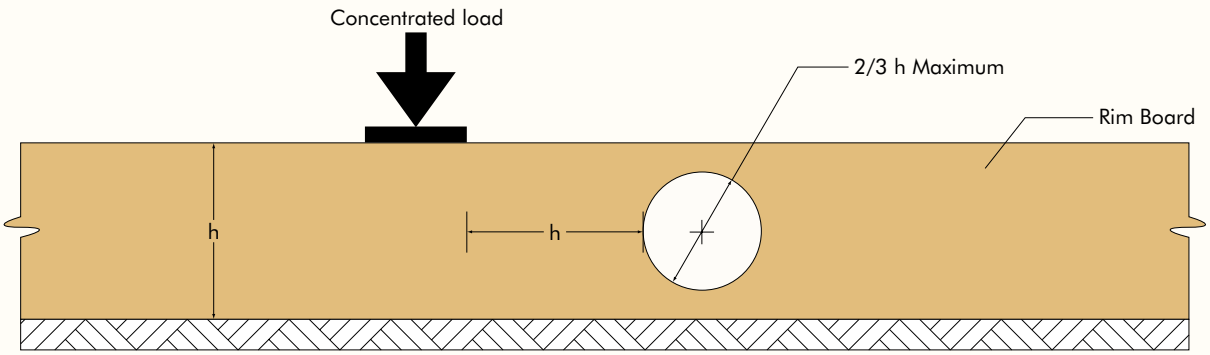

5. For multiple holes, the clear spacing between holes shall be at least two times the diameter of the larger hole, or twice the length of the longest side of the longest rectangular hole. This minimum hole spacing does not apply to holes of 1-1/2 inches or less in diameter, which can be placed anywhere in the Rim Board (see Note 1 for holes over opening) except that the clear distance to the adjacent hole shall be 3 inches minimum.

FIGURE 9

MULTIPLE HOLES FOR RIM BOARD

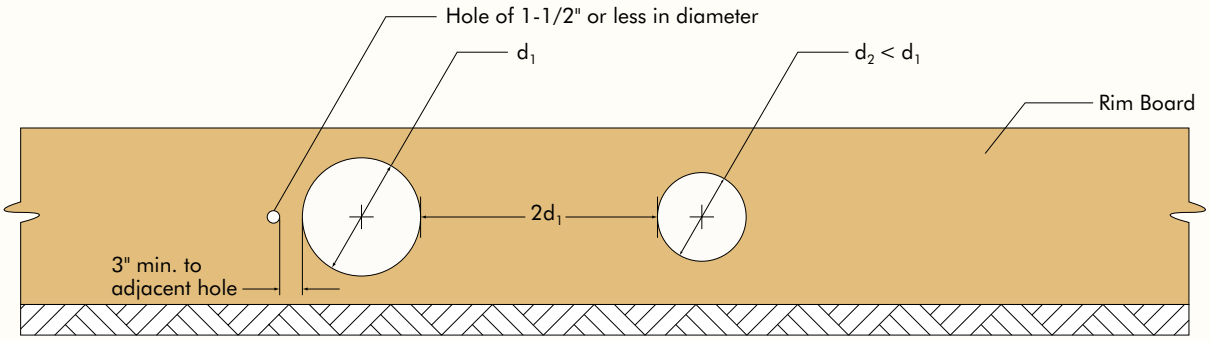

6. All holes shall be cut in a workman-like manner in accordance with the limitations listed above.

TABLE 7

DESIGN PROPERTIES FOR *APA EWS* PERFORMANCE RATED I-JOISTS(1)

Depth	Joist Designation	EI(2) 10^6 lbf-in.^{2}	M(3) lbf-ft	V(4) lbf	IR(5) lbf	ER(6) lbf	K(7) 10^6 lbf
9-1/2"	PRI-20	145	2,520	1,120	1,700	830	4.94
	PRI-30	161	3,225	1,120	1,905	945	4.94
	PRI-40	193	2,735	1,120	2,160	1,080	4.94
	PRI-50	186	3,800	1,120	2,040	1,015	4.94
	PRI-60	231	3,780	1,120	2,160	1,080	4.94
11-7/8"	PRI-20	253	3,265	1,420	1,700	830	6.18
	PRI-30	280	4,170	1,420	1,905	945	6.18
	PRI-40	330	3,545	1,420	2,500	1,200	6.18
	PRI-50	322	4,915	1,420	2,040	1,015	6.18
	PRI-60	396	4,900	1,420	2,500	1,200	6.18
	PRI-70	420	6,595	1,420	2,335	1,160	6.18
	PRI-80	547	6,940	1,420	2,760	1,280	6.18
	PRI-90	604	8,770	1,925	3,355	1,400	6.18
14"	PRI-40	482	4,270	1,710	2,500	1,200	7.28
	PRI-50	480	5,860	1,710	2,040	1,015	7.28
	PRI-60	584	5,895	1,710	2,500	1,200	7.28
	PRI-70	613	7,865	1,710	2,335	1,160	7.28
	PRI-80	802	8,360	1,710	3,020	1,280	7.28
	PRI-90	881	10,460	2,125	3,355	1,400	7.28
16"	PRI-40	657	4,950	1,970	2,500	1,200	8.32
	PRI-50	663	6,715	1,970	2,040	1,015	8.32
	PRI-60	799	6,835	1,970	2,500	1,200	8.32
	PRI-70	841	9,010	1,970	2,335	1,160	8.32
	PRI-80	1,092	9,690	1,970	3,020	1,280	8.32
	PRI-90	1,192	11,985	2,330	3,355	1,400	8.32

For SI: 1 lbf = 4.45kN, 1 lbf.ft. = 1.356 N.m, 1lbf.in.^{2} = 0.00287 N.m^2, 1 inch - 25.4 mm.

(1) The tabulated values are design values for normal duration of load. All values, except for EI and K, are permitted to be adjusted for other load durations as permitted by the code for solid sawn lumber.

(2) Bending stiffness (EI) of the I-joist.

(3) Moment capacity (M) of I-joists, which shall **not** be increased by any code allowed repetitive member use factor.

(4) Shear capacity (V) of the I-joist.

(5) Intermediate reaction (IR) of the I-joist with a minimum bearing length of 3-1/2 inches without bearing stiffeners.

(6) End reaction (ER) of the I-joist with a minimum bearing length of 1-3/4 inches without web stiffeners. Higher end reactions are permitted. For a bearing length of 4 inches (5 inches for 14" and 16" PRI-50s), the end reaction may be set equal to the tabulated shear value. Interpolation of the end reaction between 1-3/4 and 4-inch (5-inch for 14" and 16" PRI-50s) bearing is permitted. For end reaction values over 1,550 lbf, web stiffeners are required with the exception of PRI-90, which requires bearing stiffeners when end reaction values exceed 1,885 lbf.

(7) Coefficient of shear deflection (K). For calculating uniform load and center-point load deflections of the I-joist in a simple-span application, use Eqs. 1 and 2.

Uniform Load: $$\delta = \frac{5\omega\ell^4}{384EI} + \frac{\omega\ell^2}{K} \quad [1]$$

Center-Point Load: $$\delta = \frac{P\ell^3}{48EI} + \frac{2P\ell}{K} \quad [2]$$

Where: δ = calculated deflection (in.)
ω = uniform load (lbf/in.)
ℓ = design span (in.)
P = concentrated load (lbf)
EI = bending stiffness of the I-joist (lbf-in.^{2})
K = coefficient of shear deflection (lbf)

PERFORMANCE RATED I-JOISTS

We have field representatives in many major U.S. cities and in Canada who can help answer questions involving APA and *APA EWS* trademarked products. For additional assistance in specifying engineered wood products, contact us:

APA – THE ENGINEERED WOOD ASSOCIATION HEADQUARTERS
7011 So. 19th St.
Tacoma, Washington 98411-0700
(253) 565-6600 ▪ Fax: (253) 565-7265

Web Address: @
www.apawood.org

PRODUCT SUPPORT HELP DESK
(253) 620-7400
E-mail Address: help@apawood.org

The product use recommendations in this publication are based on the continuing programs of laboratory testing, product research, and comprehensive field experience of Engineered Wood Systems. However, because EWS has no control over quality of workmanship or the conditions under which engineered wood products are used, it cannot accept responsibility for product performance or designs as actually constructed. Because engineered wood product performance requirements vary geographically, consult your local architect, engineer or design professional to assure compliance with code, construction, and performance requirements.

Issued April 2004

ENGINEERED WOOD SYSTEMS
APA EWS