THE PAD WILL BE POURED WITH THE REBAR STANDING UP TO FIT INTO THE BLOCK, THEN THE BLOCK WILL BE PLACED IN POSITION WITH THE REBAR AND STRAP AND POURED FULL OF CONCRETE.

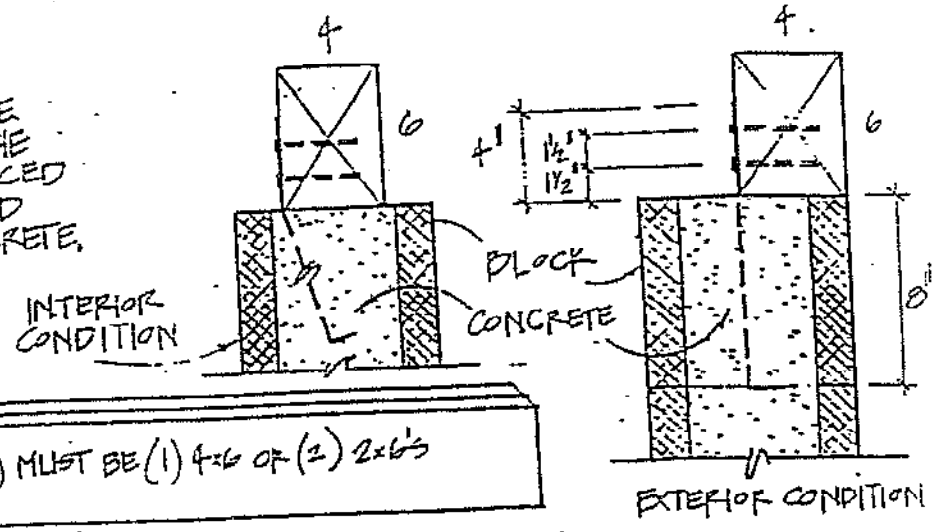

SILL (OR BEAM) MUST BE (1) 4x6 OR (2) 2x6's

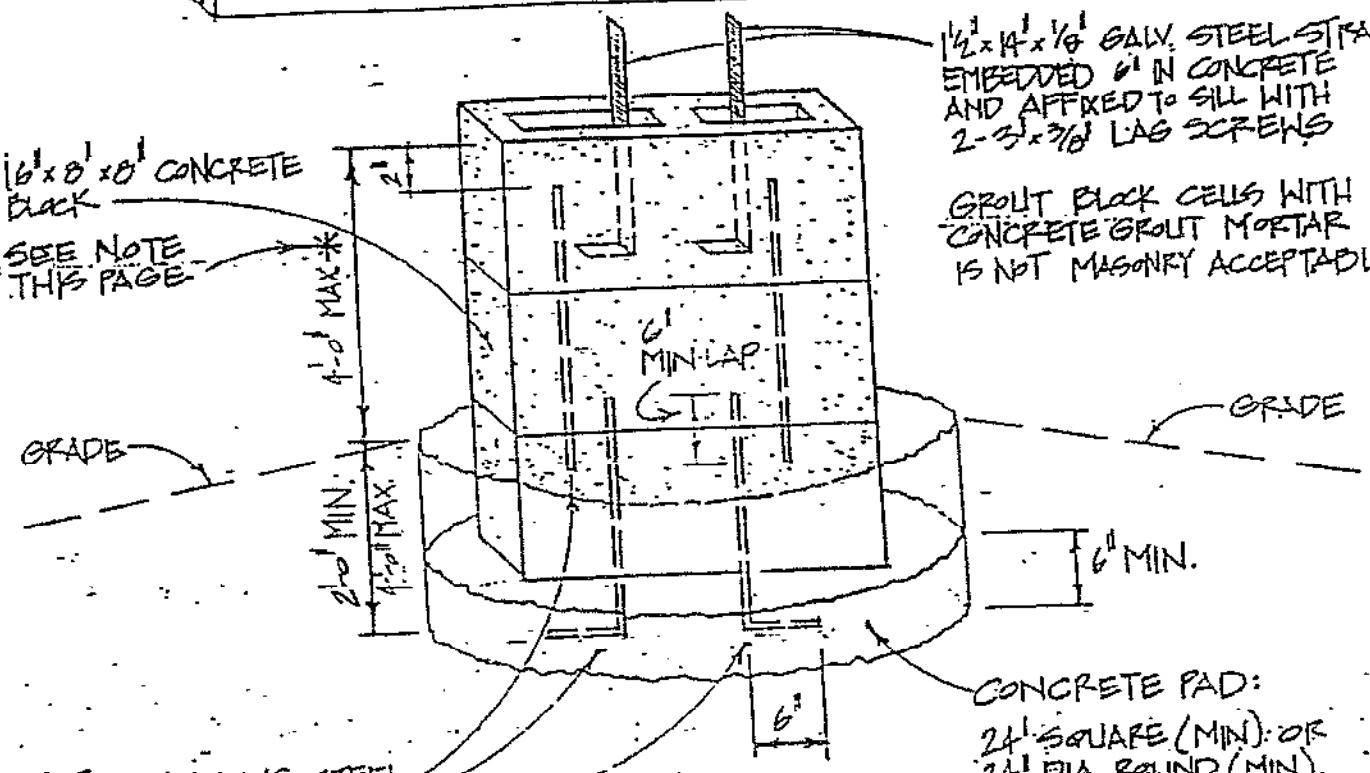

GROUT BLOCK CELLS WITH CONCRETE GROUT MORTAR IS NOT MASONRY ACCEPTABLE

*NOTE: FOR FOOTING HEIGHT GREATER THAN 36" ABOVE GRADE, USE DOUBLE BLOCKS PLACED IN ALTERNATING DIRECTIONS TO FORM A SQUARE FOOTING WITH REINFORCING IN ALL FOUR CELLS.

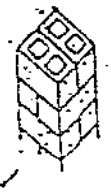

SILL (OR BEAM) MUST BE 4"x6" SILL MUST BE FREE OF ROT AND/OR TERMITE DAMAGE. IF SITUATED WITHIN 12" OF THE GROUND, SILL MUST BE OF TREATED WOOD, OR OF WOOD WHIC IS NATURALLY DECAY RESISTANT. - 1988 U.B.C. 2516 (c)(2).

CINDER BLOCK PIER

NOT TO SCALE